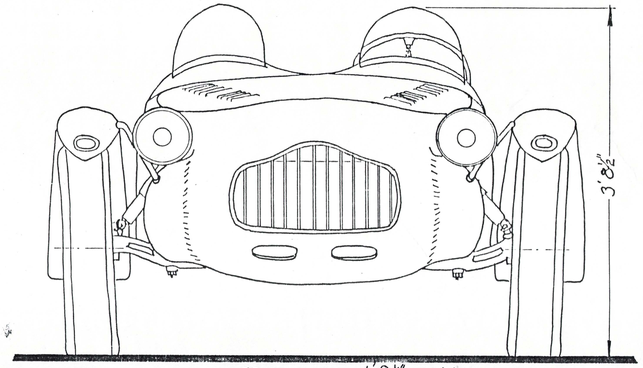

FRONT TRACK 4'8½" = 56½"

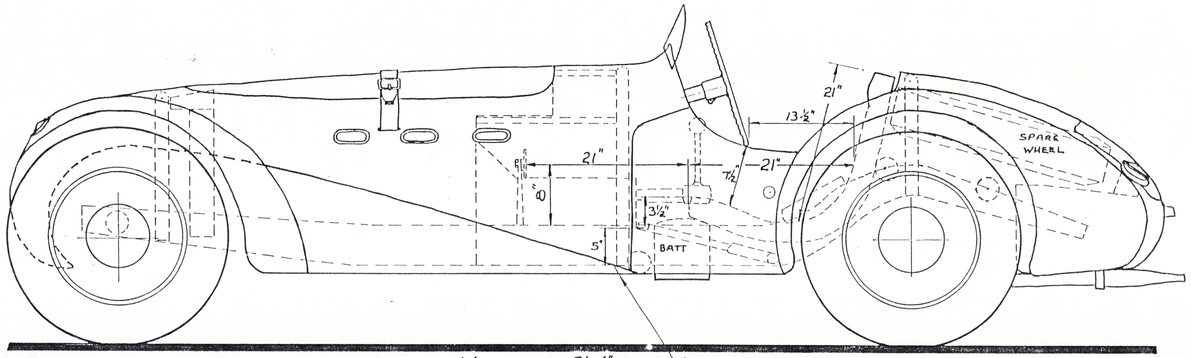

WHEELBASE 8' 4" HANDBRAKE FULL ON

OVERALL LENGTH 12' 4½"

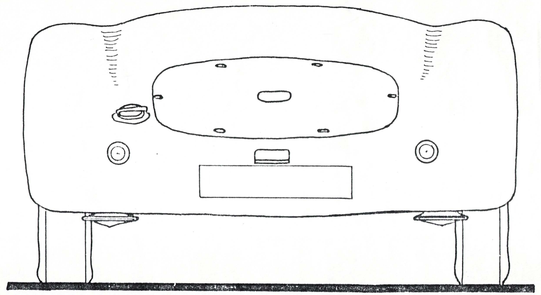

REAR TRACK 4' 4½"

SCALE :- 1:10

THIS DRAWING MAY BE SCALED

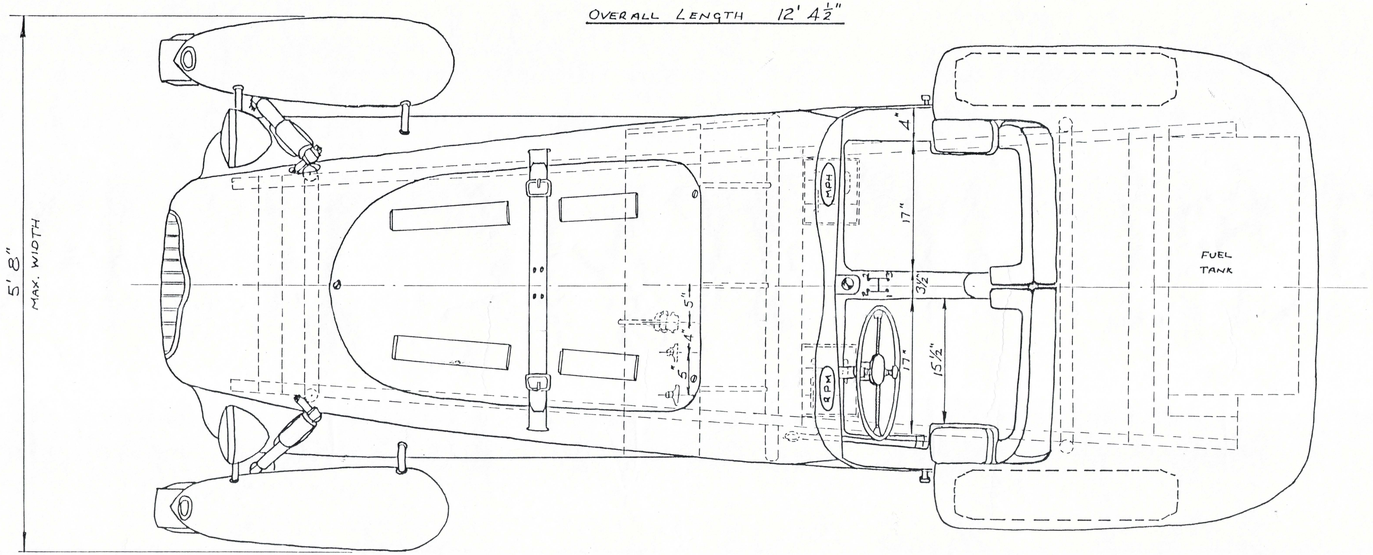

REF Nº	PART Nº	PART NAME	MATERIAL	FINISH

DESCRIPTION: J2 COMPETITION MODEL

DESIGNED BY		DRAWN BY	[illegible]	SCALE	DRAWING Nº
PASSED BY		DATE	7-6-50	1:10	9641B

ALLARD MOTOR COMPANY LIMITED